Infringement Defence Strategies

Avoiding and Defending Patent Infringement Actions

Michael Butler

Frank B. Dehn & Co., Patent Attorneys

FRANK B. DEHN & CO.

Patent and Trade Mark Attorneys

Topics

- To give a practical insight into strategies for avoiding or defending patent infringement litigation.
- To look at the problems for SME's.
- To consider how Patent Offices can help.
- To go through practical examples.

Avoid Patent Litigation

- Expense
- Uncertainty
- Delays
- Management Time
- Loss of Customer Confidence
- Loss of Investor Confidence
- Interruption of Sales
- Cost of Developing Alternative Product

Expense

- Defending a patent infringement action in the Courts can easily cost from tens of thousands of Euros to hundreds of thousands of Euros.
- Need to:
  - Defend infringement allegations.
  - Attack validity.
  - Pay Lawyers, Patent Attorneys, Witnesses, Experts, Search Agencies ....
  - Use up valuable management time.

Consequences of Losing

- Pay own legal costs.
- Pay Patentee's legal costs.
- Pay Patentee compensation.
  - Damages, royalties, account of profits.
- Withdraw infringing product.
- Develop new product.
- Attempt to enter market again

SME's Suffer Badly

- Limited resources
  - Money
  - Time
  - People
  - Experience
- Critical Outcome
  - Limited product range
  - Limited R & D resources
  - Attracting investment difficult

Avoiding Problems

- Check what patent coverage exists.
- Before starting a project
  - Subject matter background search
  - Search by known competitors
- During a project
  - Regular searches on subject matter and competitors
  - Specific searches on critical features

Freedom to Operate Search

- Standard novelty searches are insufficient
  - Searching for infringement is not the same as searching for novelty
  - More complex and more expensive
- Searching Organisations
  - Some Patent Offices do special searches.
    - UKPO – 10 day turnaround for Freedom to Operate Search, costs start at about 2000 Euros
  - Complex searches can be much more expensive

Patents Uncovered

- Initial filtering within company is useful
  - Particularly for regular searches
- Fuller consideration by a Patent Attorney
- Opinions can vary from country to country
  - May need advice from local Attorney or lawyer
- Costs of analysis can easily reach several thousand Euros

What About SME's?

- For start up companies, unfavourable results might scare investors
- In practice many start up companies do not carry out freedom to operate searches
  - Rely on novelty searches
- Many SME's do not conduct regular searches
  - Limited funds, limited staff resources
- As SME's grow, systems develop

A Personal View

- An early freedom to operate search by the Patent Office is a good strategy for an SME
  - Reasonable cost
  - Will identify obvious difficulties
  - May also serve as a background novelty search
- In practice, none of my clients has done this
- Education is required on a more professional approach to IP, allocating sufficient funds

Patent Alert! First Steps

- Do the basic, inexpensive work first
  - Register and File Inspections
  - Check status
  - Collect prior art and examination reports / responses
  - Equivalent cases in other countries
- Esp@cenet, Inpadoc, EPO Register Plus, USPTO online file inspections, local file inspections

Basic Information

- Granted patent - what claims do they have?
- Pending applications - what patent claims are they likely to get ?
- What prior art has been cited?
- What arguments have been presented for and against validity?

Crucial Questions

- 1 Given the patent claims that are granted or are likely to be granted, is there a risk of infringement?
- 2 Given all of the known prior art is there a reasonable case that any claims are invalid?
- 3 What is the chance of there being a granted claim that is both (a) infringed and (b) valid?

Considering Question 3

- A patentee may rely on a sub-claim
- In some countries a granted patent can be amended by introducing a feature into the broadest claim which is not in a sub-claim
- For a patent, a claim can only be limited.
- For a pending application other amendments are possible.
- Divisional applications possible before grant.

Example – EP1312090

- 1. Disc for use in an apparatus for signal processing, which apparatus comprises a digital audio source and a record player with a turntable and an arm carrying a pick-up element ..... and which comprises a time-code signal wherein during use of the disc the said time-code signal controls the digital audio source.
- 2. .....
- 3. Disc according to claim 1 or 2, characterized in that the time-code signal is modulated on a carrier frequency in the audible range between 20 and 20.000 Hz .
- 4. Disc according to claim 3, characterized in that the time-code signal is comprised in both the left and the right channel of the groove, having a mutual phase shift.

History - EP1312090

- Voluntary amendment made combining claims 1 / 3.
- Third Party Observations lodged
- Application refused, Appeal lodged
- Auxiliary Request allowed.
- Claim 1 as granted is combination of original claims 1 and 4 only
- Original claims 2 and 3 remain as sub-claims

If the Patent had been Granted

- If EP1312090 had been granted and opposed, the Auxiliary Request would have been impermissible
- Claim 1 would have to be a combination of original claims 1, 3 and 4.
- After grant a feature cannot be removed.
- This is taken into account when considering tactics for attacking a patent application.

Supplementary Searching

- If there is going to be a problem conduct further searches
- An expert may have knowledge of non-patent literature that is relevant
- The client may know of relevant prior use
- There may have been a mistake in the basic Patent Office search
- Lateral Thinking

WO0161692

1. A portable data storage device comprising a coupling device for coupling to a computer serial bus, an interface device coupled to the coupling device, a memory control device and a non-volatile solid-state memory device; the memory control device being coupled between the interface device and the memory device to control the flow of data from the memory device to the coupling device.

WO0161692

- ISR cites documents of background interest only.
- IPER favourable – novelty and inventive step.
- Patent granted in Singapore
- Client sued
- Position looks difficult

WO0161692

INTERNATIONAL SEARCH REPORT	International application No. PCT/SG 00/00029

CLASSIFICATION OF SUBJECT MATTER

IPC[7]: G11B 11/00

G11B: INFORMATION STORAGE BASED ON RELATIVE MOVEMENT BETWEEN RECORD CARRIER AND TRANSDUCER

G11C: STATIC STORES

FRANK B. DEHN & CO.
Patent and Trade Mark Attorneys

EPO Prosecution

- Examiner cites additional material, and there are Third Party Observations

Application No.	Ref.	Date
00 911 548.6 - 2212	TLW/45296	01.02.2007
Applicant Trek 2000 International Ltd		

Decision to refuse a European Patent application

The Examining Division - at the oral proceedings dated 09.11.2006 - has decided:

European Patent application No. 00 911 548.6 is refused.

FRANK B. DEHN & CO.

Patent and Trade Mark Attorneys

Lateral Thinking (1)

- Patent granted for an alarm worn by an elderly or infirm person. Pressing a button on the alarm causes a base unit to dial preset numbers for help.
- Novel feature is an additional button to respond to an incoming phone call, if the wearer cannot reach the phone.
- Reassures caller that wearer is OK but cannot reach the phone in time.

Lateral Thinking (2)

- Patents granted in various countries
- Searches by EPO and USPTO
- Infringers sued successfully
- Injunctions granted by Courts
- Client desperate to continue sales
- Lawyers instruct Patent Attorneys to search

Lateral Thinking (3)

- We do not search for alarms with the additional feature for responding to an incoming phone call
- We search for cordless telephones, and look through the detail to see if any of them has an alarm feature
- We find one – a cordless phone which has an alarm button that causes emergency calls to be made

How to Use the Prior Art

- The patentee's case is going to collapse.
- Do we attack the patent openly so that it is public knowledge that it is invalid?
- Do we tell the patentee that we will not disclose the new prior art if a royalty free licence is granted?
- Handling litigation is not always a simple matter.

Pre-Emptive Action

- You are aware that there may be a patent infringement dispute.
- There is a reasonable argument that there is no infringement

  and / or
- There are reasonable grounds for invalidity
- What courses of action are available?

Aggressive Courses of Action

- Third party observations on pending case
- Opposition against granted patent
- Invalidity action (national) against patent
- Application for a declaration of non-infringement
- Application for a declaration of non-infringement and an invalidity action

Forum for Aggressive Action

- Patent Office for third party observations and oppositions.
- In the UK, Patent Office for Declaration of Non-Infringement, Invalidity Action, or both.
- Court for Declaration of Non-Infringement, or Invalidity Action.
- In the UK, same Court for both actions.
  - Not the case everywhere, for example Germany

Less Aggressive Action

- The UK Patent Office has additional powers
- It is possible to apply for a non binding opinion on whether
  - A patent is infringed
  - A patent is invalid
- The patentee is informed and may make observations
- Either party can ask for a Review of an opinion

Opinion

- The result of an Opinion, whether or not there is a Review, is non binding
  - Patent is not revoked
  - No action taken against infringer
- Inexpensive and fairly quick
  - Patent Office Opinion costs about 300 Euros and takes 3 months. Review extends the procedure.
- More influential than Attorney's opinion

Decisions by Mutual Consent

- Parties can agree to be bound by an independent opinion or Patent Office opinion
  - Appeal possibilities?
- Arbitration
  - Not a great advantage over other proceedings
- Parties can agree to Patent Office hearing an infringement action (UK)
  - Rarely used

Mediation

- A mediator's job is not to reach a decision on the dispute but to help the parties work out possible solutions to it.
- There are a number of mediation services and a number of experienced mediators
- The UK Patent Office provides a mediation service and there are in house Patent Office mediators

Summary of UK PO Powers

- Non Binding Opinion on infringement or validity
- Review of Opinion
- Declaration of Non-Infringement
- Invalidity Action
- By consent, Infringement Action
- By consent, Mediation

Attitudes to the Patent Office

- Some people perceive the Patent Office as being pro-Patentee
- Personal experience is that Patent Office is more likely to maintain patent with an amendment, than to revoke it
- Personal experience is that UK Patent Office has a more professional, judicial approach than in EPO Opposition proceedings

EPO Oppositions?

- Opposition has effect in all designated states
- Invalidity proceedings may be suspended
- In some countries infringement proceedings may continue (validity a separate issue)
- In some countries infringement proceedings may be suspended
- Significant delay before final outcome

Oppose

- Opposition is normally part of a strategy
- Should not be the only strategy
- Can use 9 month period to threaten opposition and negotiate
- Be aware of possible suspension of other proceedings pending outcome of Opposition
  - May be a good or a bad thing

Oppositions and Infringement

- The EPO Opposition Division avoids infringement issues.
- Reluctant to take into account what the patentee may be saying in infringement proceedings.
- Patentee can say one thing to get the patent maintained, another to allege infringement
- “File Wrapper Estoppel”?

Tent

- Pyramid style illustrated in Patent
- Patent claim limited to refer to an apex
- Opposition Division clearly means a point
- Infringement alleged by a cube
- Opposition Division refused to limit claim to be more specific about meaning of “apex”

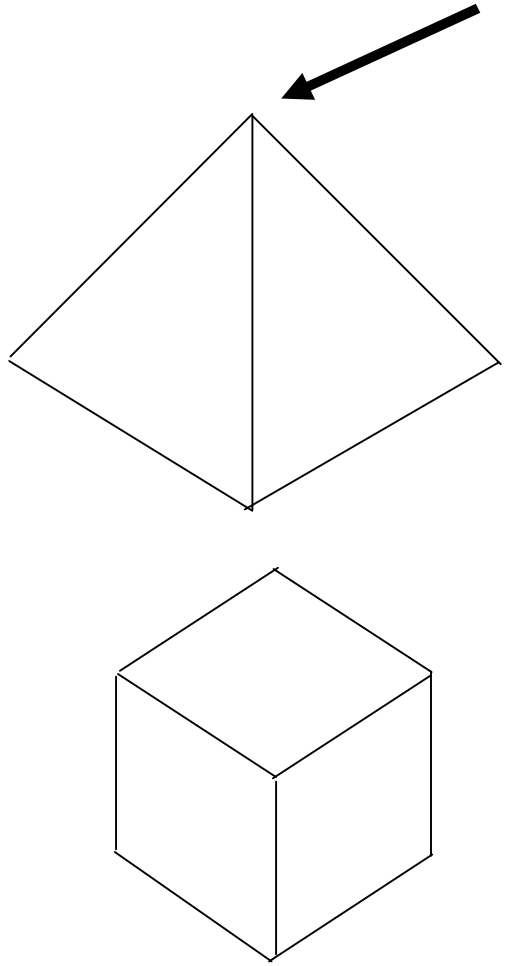

Tactics Foiled

- We knew that a judge would never hold a cube to be an infringement.
- We were hoping that a more limited claim would make it clear that another product would not infringe either.

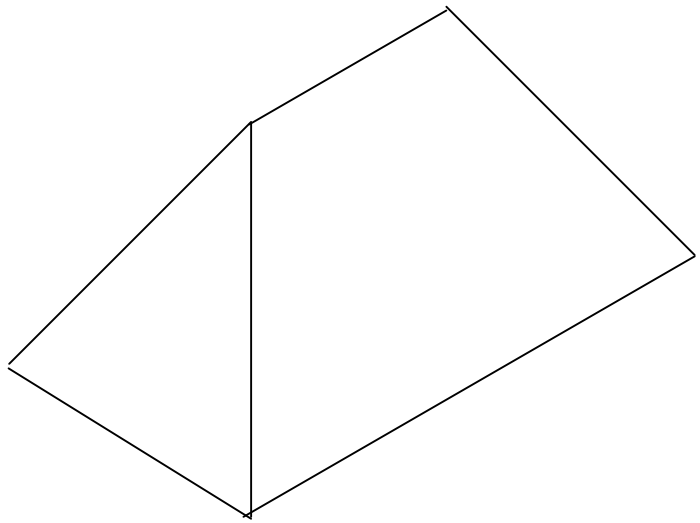

Typical General Tactics

- Written approach to patentee asking for an acknowledgement of non-infringement
- Refer to possible invalidity action and (if appropriate) EPO opposition
- Refer to possible action for declaration of non-infringement
- Take the initiative and prepare to negotiate
- Sometimes a different approach is needed

Case Study

- Your client **Goodguys Ltd.** has designed a tool for clearing debris out of oil well bores.
- Due to be launched in 6 to 9 months.
- A search reveals pending EP 2XXXXX7 with one broad claim, of **Megasue Inc.**
- Claim limited in response to examination report citing D1.
- Communication under Article 51 (4) about to issue.

EP 2XXXXX7 As Filed

Claim 1: A tool (1) for inclusion in a drill string (2) to collect debris in fluid in a well bore (3), the tool having a central bore (4) for the circulation of drilling fluid through the drill string, wherein the tool has a chamber (5) for the collection of debris, provided with a filter (6), and diversion means (7, 13,14) for directing fluid and debris into the chamber so that debris is trapped in the chamber.

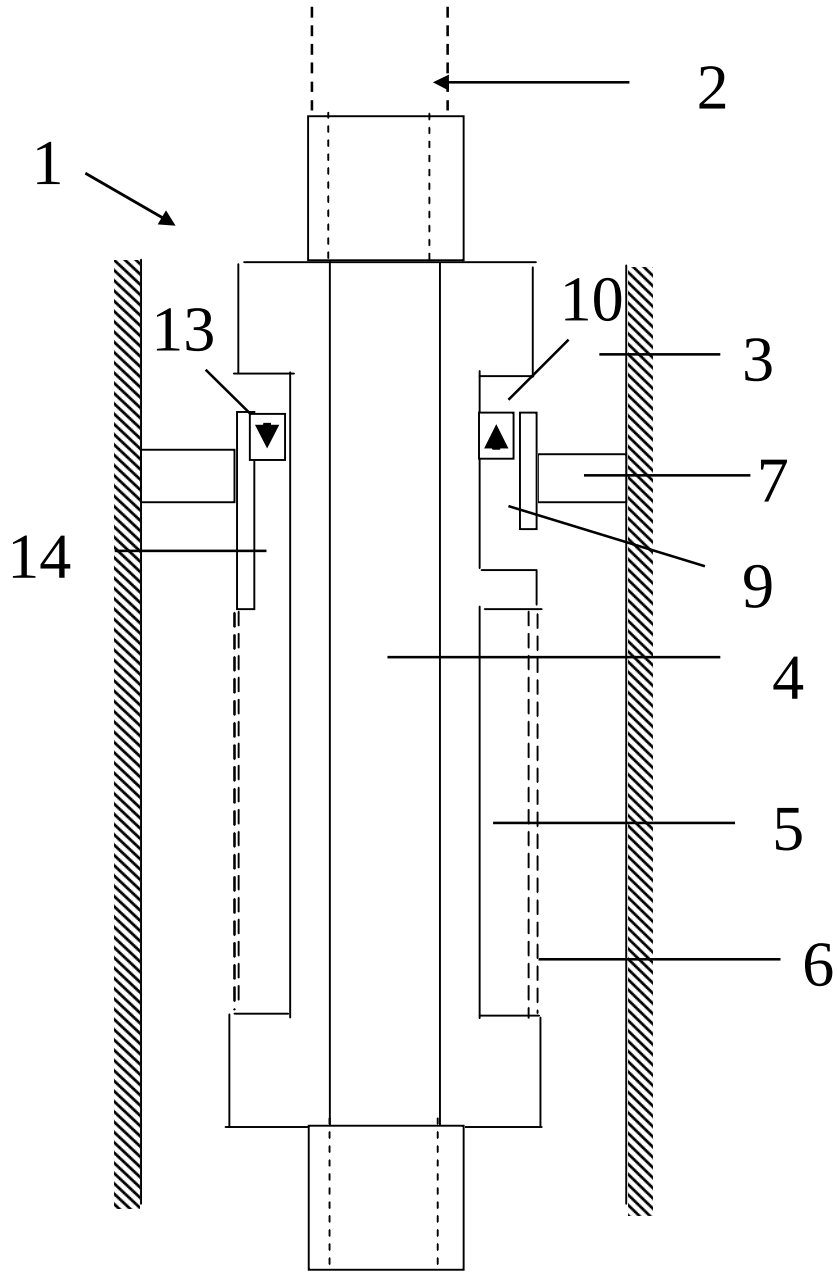

Prior Art D1

A tool (a) for inclusion in a drill string to collect debris in fluid in a well bore (b), the tool having a central bore (c) for the circulation of drilling fluid through the drill string, wherein the tool has a chamber (d) for the collection of debris, provided with fluid outlets (e), and diversion means (f) for directing fluid and debris into the chamber so that debris is trapped in the chamber.

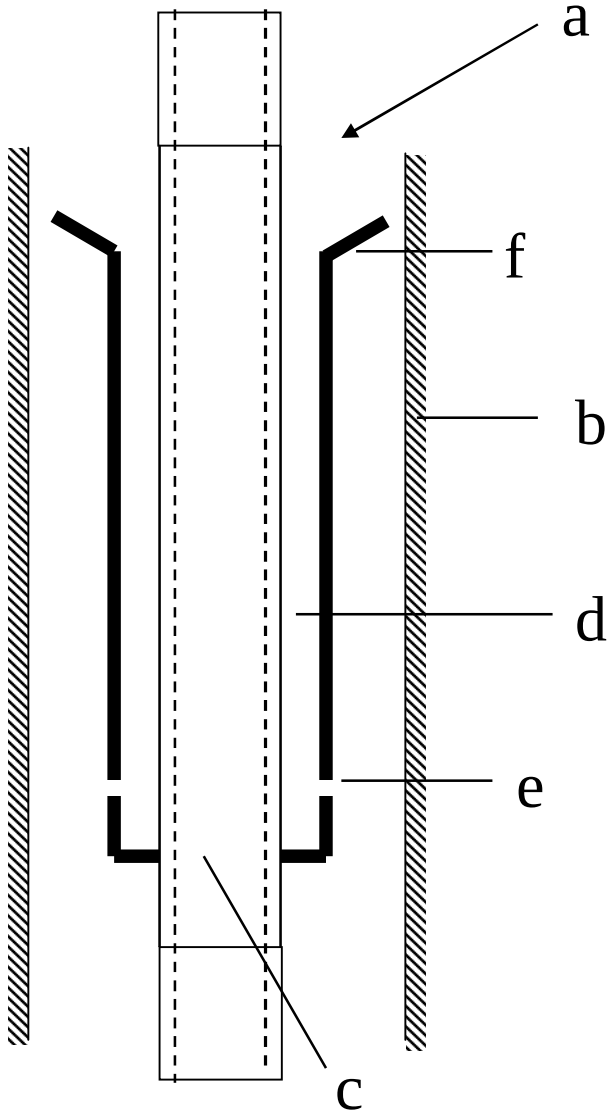

Revised Claim (part 1)

Claim 1: A tool (1) for inclusion in a drill string (2) to collect debris in fluid in a well bore (3), the tool having a central bore (4) for the circulation of drilling fluid through the drill string, wherein the tool has a chamber (5) for the collection of debris, provided with a filter (6), and diversion means (7) …….

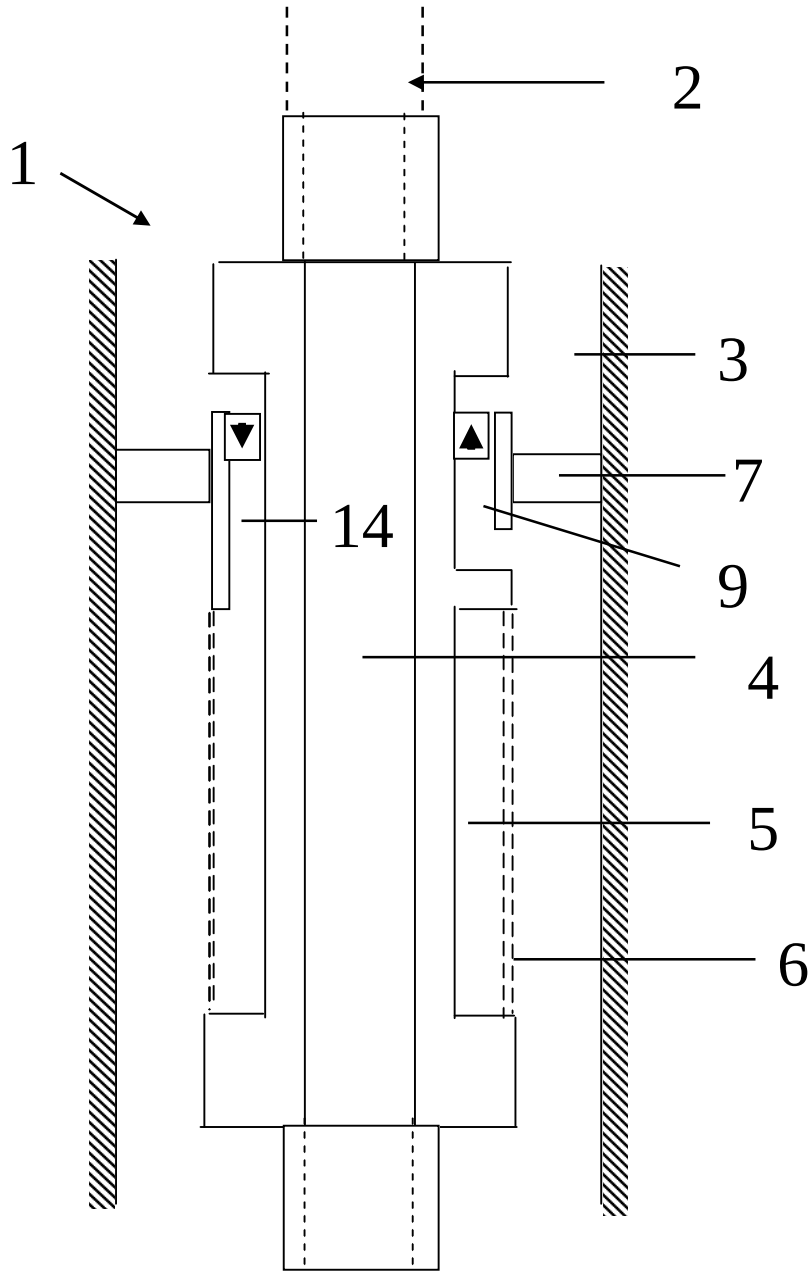

Revised Claim (part 2)

.. wherein the diversion means directs fluid and debris through a flow path (12, 13, 14) in the tool (1) into the chamber (5) when the tool is moved through the well bore (3) in a first direction (A) so that debris is filtered from the fluid by the filter (6) and trapped in the chamber (5), and ..

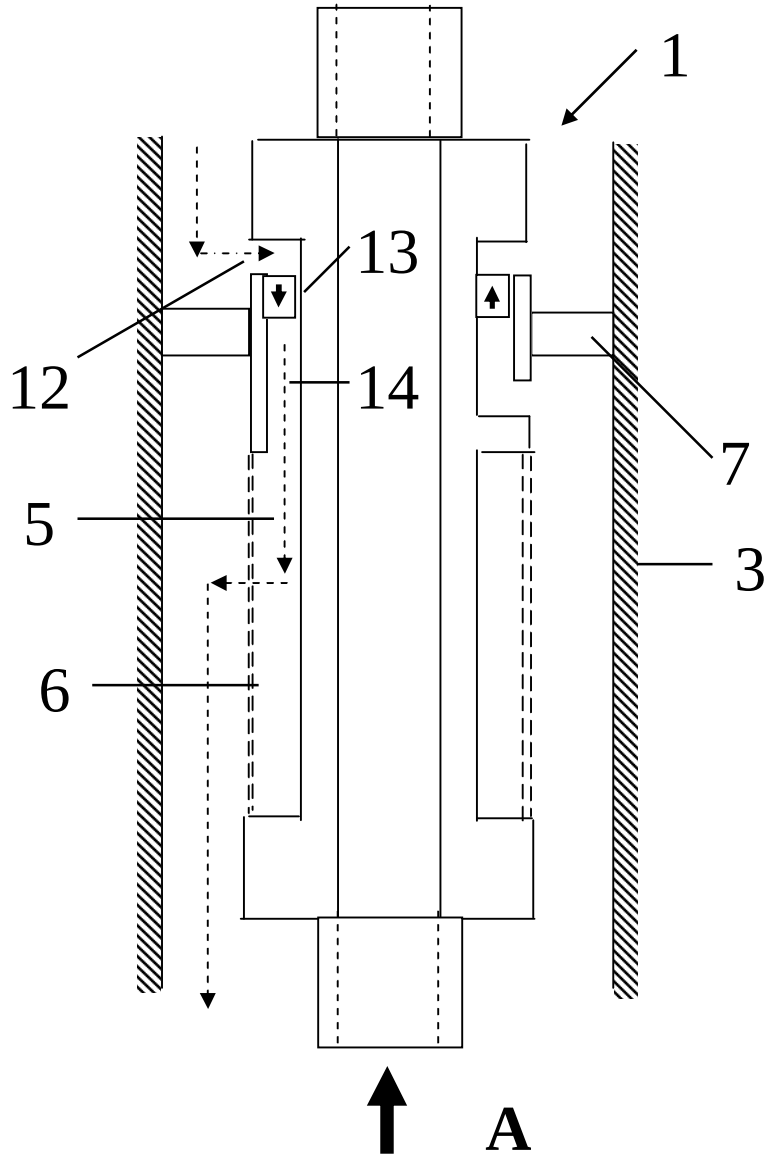

Revised Claim (part 3)

.. the diversion means directs fluid and debris through a flow path (8, 9, 10, 11) in the tool (1) which is distinct from the central bore (4) and which bypasses the chamber (5) and filter (6), when the tool is moved through the well bore (3) in the opposite direction (B).

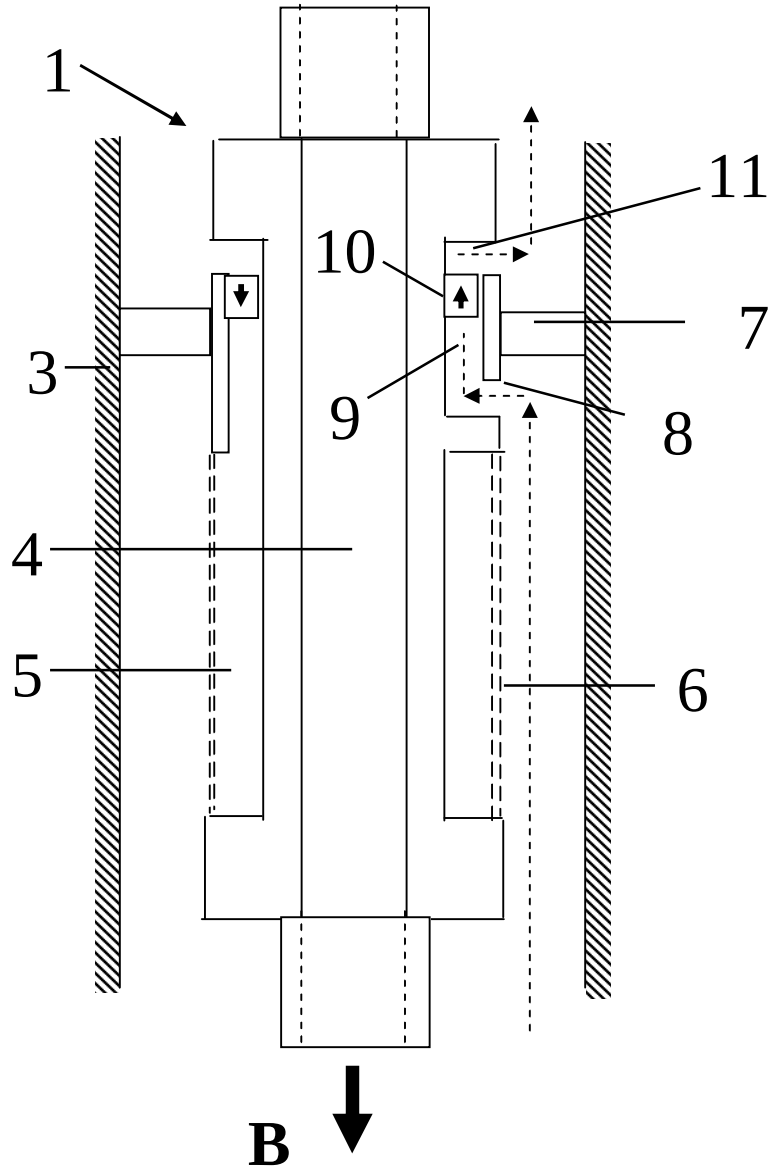

Client's Design (1)

A tool (50) for inclusion in a drill string to collect debris in fluid in a well bore (51), the tool having a central bore (52) for the circulation of drilling fluid through the drill string. The tool has a chamber (53) for the collection of debris, provided with a filter (54), and diversion means (55) which directs fluid and debris through a flow path (56, 57), including a one way valve (58), into the chamber (53) when the tool is moved through the well bore in a first direction (A), so that debris is filtered from the fluid by the filter (54) and trapped in the chamber (53).

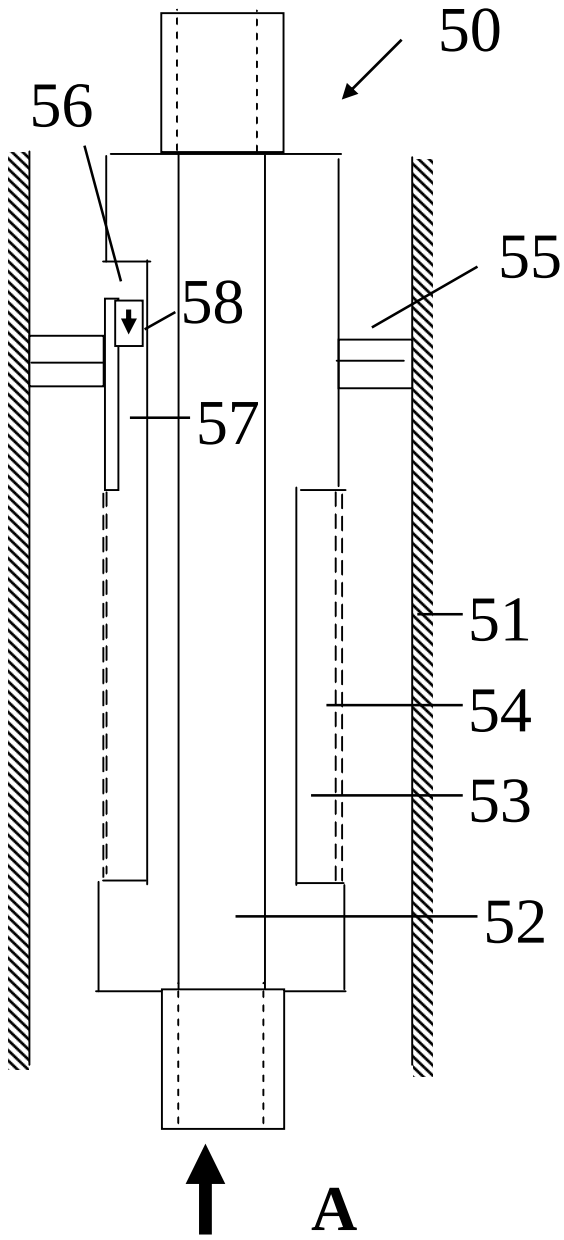

Client's Design (2)

When the tool (50) is moved through the well bore (51) in the opposite direction (B), lower sectors (60) of the diversion means (55) are rotated relative to upper sectors (59) and the diversion means (55) opens up. Fluid and debris then bypass the filter (54) and chamber (53).

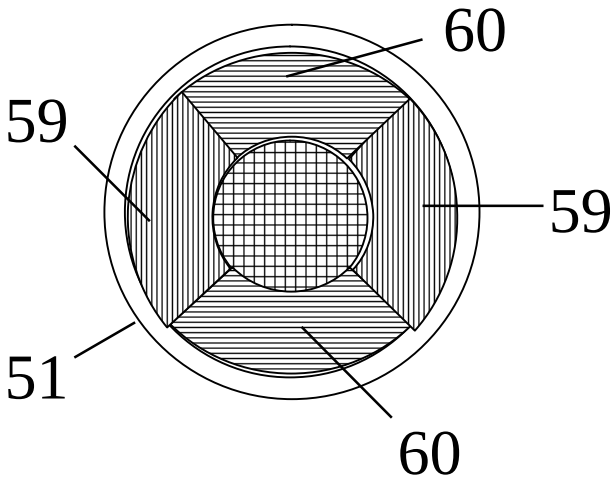

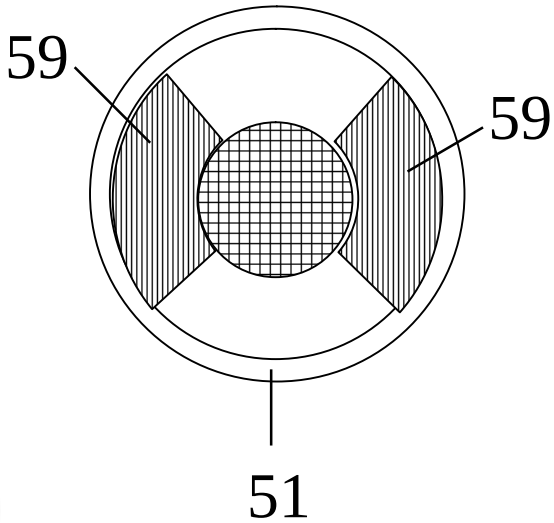

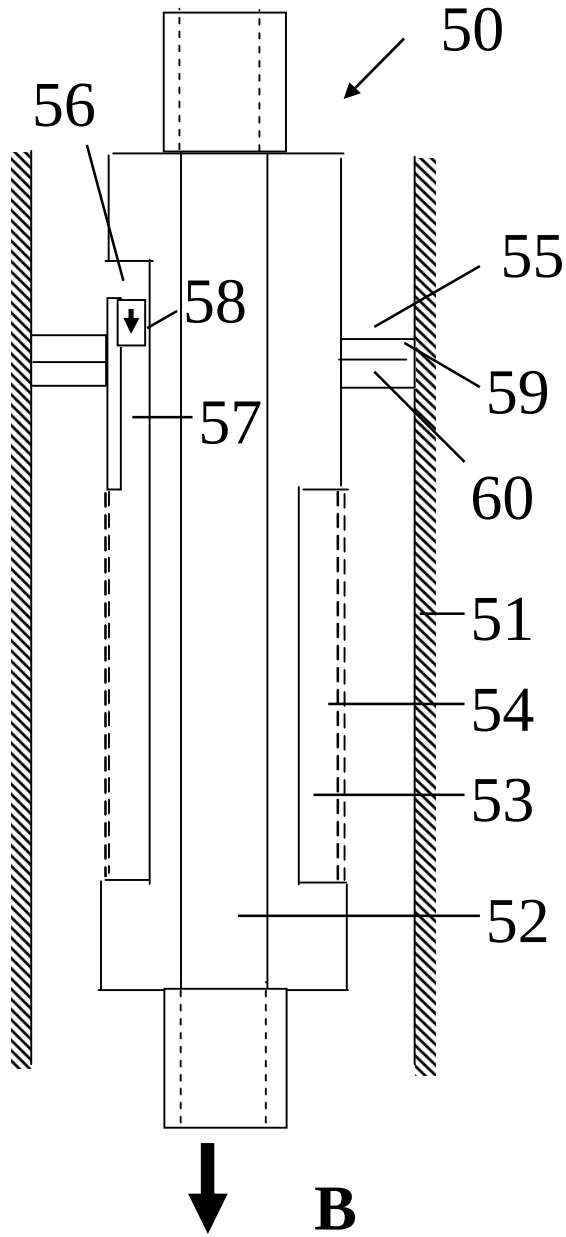

FRANK B. DEHN & CO.
Patent and Trade Mark Attorneys

Additional Searches

- An additional patent search reveals one item of prior art, D2.
- An expert believes that something similar to the patented tool was used 25 years ago.
- The expert is conducting a search through trade literature and other non-patent documents.
- The search could take months.

New Prior Art D2 (Part 1)

A tool (70) for inclusion in a drill string collects debris in fluid in a well bore (71). The tool has a central bore (72) for the circulation of drilling fluid through the tool. The tool has a chamber (73) for the collection of debris, provided with a filter (74), and diversion means (75) which directs fluid and debris through a flow path (76) into the chamber (73) when the tool is moved through the well bore in a first direction (A). Debris is trapped in the chamber (53). Fluid passes through filter (74) and a one way valve (77).

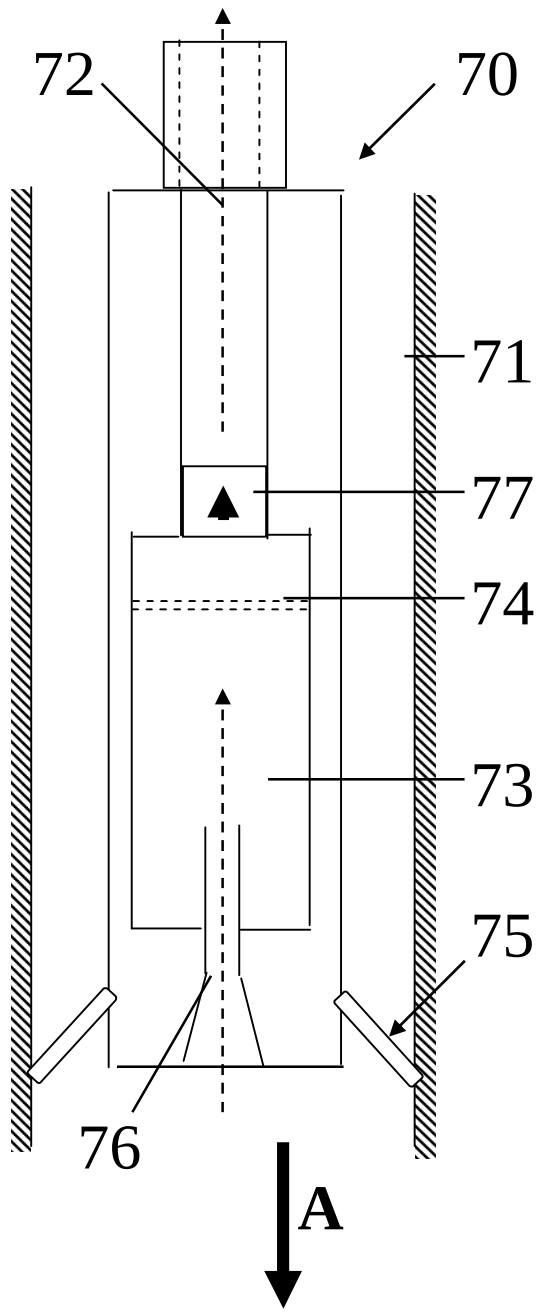

New Prior Art D2 (Part 2)

The diversion means (75) comprises a number of spring loaded petals (78). When the tool (70) moves in the opposite direction (B) the petals fold inwardly and fluid and debris flows past the tool (70), bypassing the flow path (76), chamber (73) and filter (74).

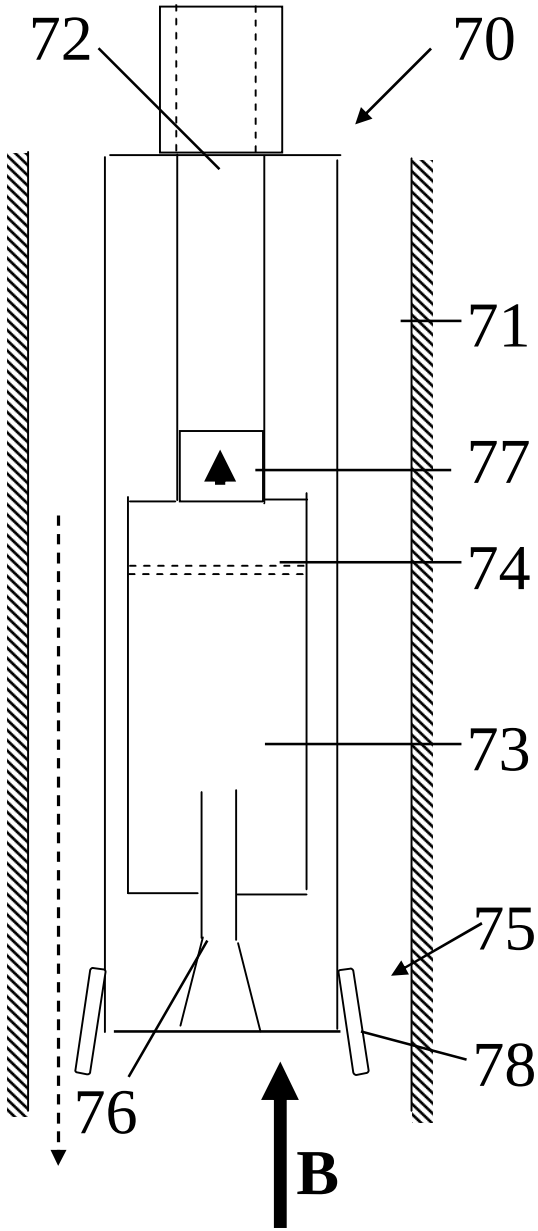

Exercise

- Assume pending patent claim is valid over D1
- Do not spend time on reaching conclusion on validity over D2, or infringement.
- Consider the tactics available to Goodguys.
- Look at potential advantages and disadvantages of different courses of action.
- Consider what Megasue might do to improve its position.

Topics to Consider

- Polite approach to Megasue
- Third Party Observations
- Opposition
- National Invalidity Action
- Declaration of Non-Infringement
- Timing

Hints

- What might Megasue do to improve its position if it finds out what Goodguys intends to do?
- Is there a simple amendment which takes the patent claim further away from D2?
- Is there a simple amendment which makes infringement more likely?

Infringement Defence Strategies

Michael Butler

mikeb@frankbdehn.com

Frank B. Dehn & Co.,

London, Oxford, Brighton, Munich

www.frankbdehn.com

FRANK B. DEHN & CO.

Patent and Trade Mark Attorneys